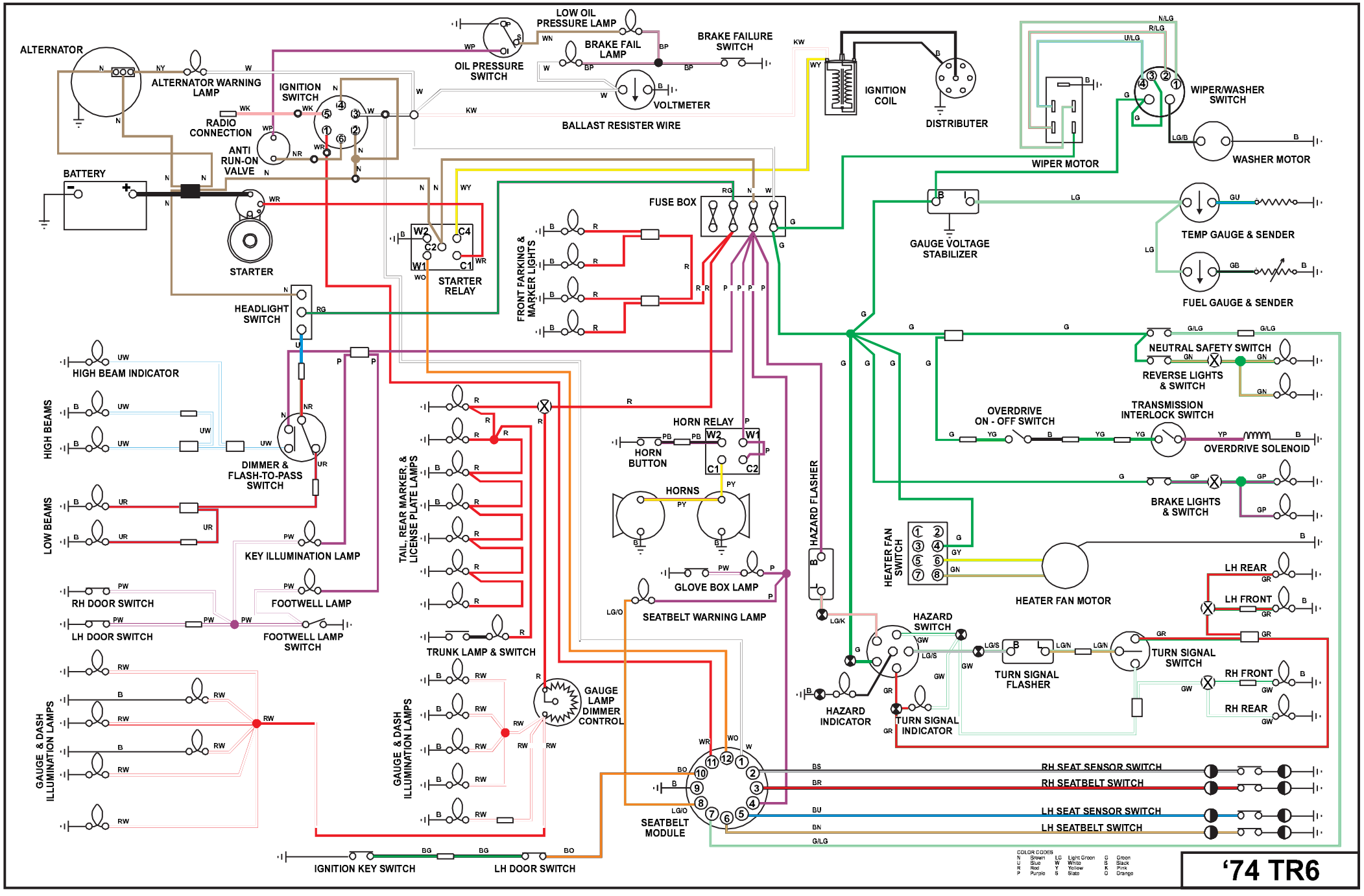
ALTERNATOR
ALTERNATOR WARNING LAMP
IGNITION SWITCH
RADIO CONNECTION
ANTI RUN-ON VALVE
BATTERY
STARTER
STARTER RELAY
OIL PRESSURE SWITCH
LOW OIL PRESSURE LAMP
BRAKE FAIL LAMP
BRAKE FAILURE SWITCH
VOLTMETER
BALLAST RESISTER WIRE
IGNITION COIL
DISTRIBUTER
WIPER/WASHER SWITCH
WIPER MOTOR
WASHER MOTOR
FUSE BOX
GAUGE VOLTAGE STABILIZER
TEMP GAUGE & SENDER
FUEL GAUGE & SENDER
FRONT PARKING & MARKER LIGHTS
HEADLIGHT SWITCH
HIGH BEAM INDICATOR
HIGH BEAMS
LOW BEAMS
DIMMER & FLASH-TO-PASS SWITCH
KEY ILLUMINATION LAMP
RH DOOR SWITCH
LH DOOR SWITCH
FOOTWELL LAMP
FOOTWELL LAMP SWITCH
TAIL, REAR MARKER & LICENSE PLATE LAMPS
TRUNK LAMP & SWITCH
HORN RELAY
HORN BUTTON
HORNS
GLOVE BOX LAMP
SEATBELT WARNING LAMP
HAZARD FLASHER
HAZARD SWITCH
HAZARD INDICATOR
TURN SIGNAL FLASHER
TURN SIGNAL SWITCH
TURN SIGNAL INDICATOR
NEUTRAL SAFETY SWITCH
REVERSE LIGHTS & SWITCH
OVERDRIVE ON - OFF SWITCH
TRANSMISSION INTERLOCK SWITCH
OVERDRIVE SOLENOID
BRAKE LIGHTS & SWITCH
HEATER FAN SWITCH
HEATER FAN MOTOR
LH REAR
LH FRONT
RH FRONT
RH REAR
GAUGE & DASH ILLUMINATION LAMPS
GAUGE LAMP DIMMER CONTROL
SEATBELT MODULE
RH SEAT SENSOR SWITCH
RH SEATBELT SWITCH
LH SEAT SENSOR SWITCH
LH SEATBELT SWITCH
IGNITION KEY SWITCH
LH DOOR SWITCH
COLOR CODES
N Brown LG Light Green G Green
U Blue W White B Black
R Red Y Yellow K Pink
P Purple S Slate O Orange
'74 TR6