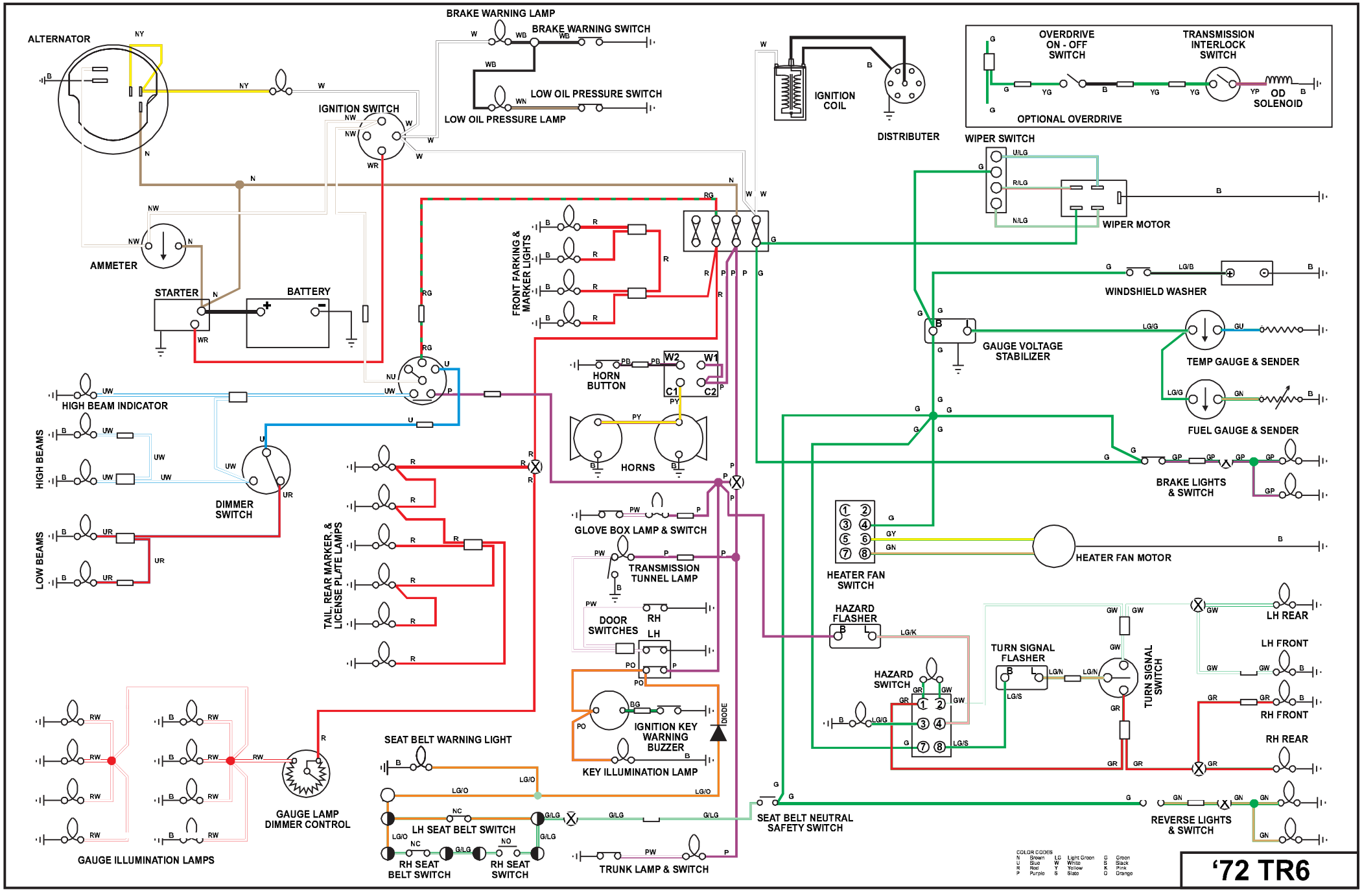
ALTERNATOR
BRAKE WARNING LAMP
BRAKE WARNING SWITCH
LOW OIL PRESSURE SWITCH
LOW OIL PRESSURE LAMP
IGNITION SWITCH
IGNITION COIL
DISTRIBUTER
OVERDRIVE ON - OFF SWITCH
TRANSMISSION INTERLOCK SWITCH
OD SOLENOID
OPTIONAL OVERDRIVE
WIPER SWITCH
WIPER MOTOR
AMMETER
STARTER
BATTERY
FRONT PARKING & MARKER LIGHTS
WINDSHIELD WASHER
GAUGE VOLTAGE STABILIZER
TEMP GAUGE & SENDER
FUEL GAUGE & SENDER
HORN BUTTON
HORNS
HIGH BEAM INDICATOR
HIGH BEAMS
LOW BEAMS
DIMMER SWITCH
TAIL, REAR MARKER, & LICENSE PLATE LAMPS
BRAKE LIGHTS & SWITCH
GLOVE BOX LAMP & SWITCH
TRANSMISSION TUNNEL LAMP
DOOR SWITCHES
RH
LH
HEATER FAN SWITCH
HEATER FAN MOTOR
HAZARD FLASHER
HAZARD SWITCH
TURN SIGNAL FLASHER
TURN SIGNAL SWITCH
LH REAR
LH FRONT
RH FRONT
RH REAR
IGNITION KEY WARNING BUZZER
DIODE
KEY ILLUMINATION LAMP
SEAT BELT WARNING LIGHT
LH SEAT BELT SWITCH
RH SEAT BELT SWITCH
RH SEAT SWITCH
SEAT BELT NEUTRAL SAFETY SWITCH
REVERSE LIGHTS & SWITCH
TRUNK LAMP & SWITCH
GAUGE LAMP DIMMER CONTROL
GAUGE ILLUMINATION LAMPS
COLOR CODES
N Brown
U Blue
R Red
P Purple
LG Light Green
W White
Y Yellow
S Slate
G Green
B Black
K Pink
O Orange
'72 TR6