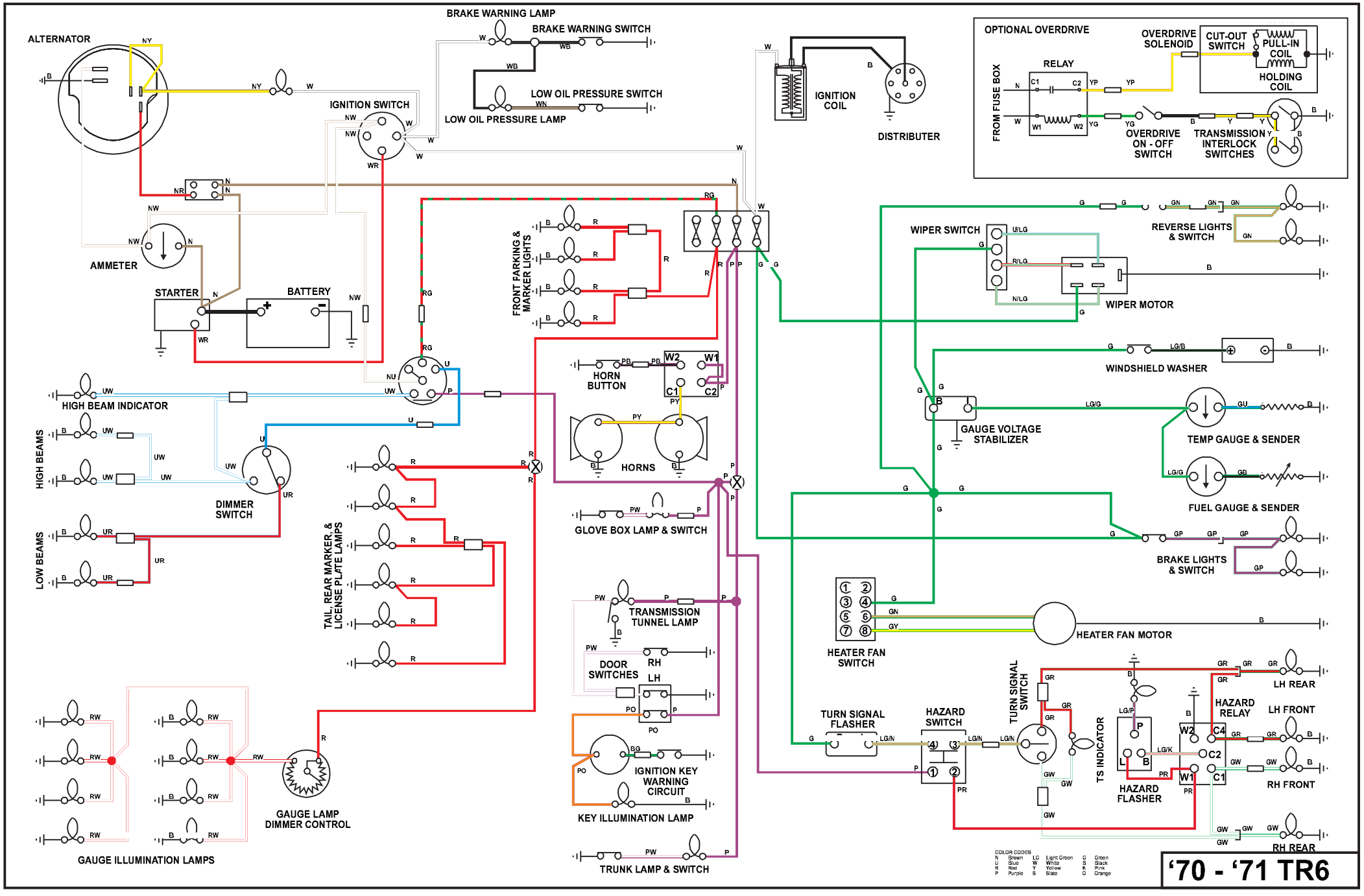
ALTERNATOR
BRAKE WARNING LAMP
BRAKE WARNING SWITCH
LOW OIL PRESSURE SWITCH
LOW OIL PRESSURE LAMP
IGNITION SWITCH
IGNITION COIL
DISTRIBUTER
OPTIONAL OVERDRIVE
OVERDRIVE SOLENOID
CUT-OUT SWITCH
PULL-IN COIL
HOLDING COIL
RELAY
FROM FUSE BOX
OVERDRIVE ON - OFF SWITCH
TRANSMISSION INTERLOCK SWITCHES
AMMETER
STARTER
BATTERY
FRONT PARKING & MARKER LIGHTS
WIPER SWITCH
WIPER MOTOR
REVERSE LIGHTS & SWITCH
WINDSHIELD WASHER
HORN BUTTON
HORNS
GAUGE VOLTAGE STABILIZER
TEMP GAUGE & SENDER
FUEL GAUGE & SENDER
BRAKE LIGHTS & SWITCH
HIGH BEAM INDICATOR
HIGH BEAMS
LOW BEAMS
DIMMER SWITCH
TAIL, REAR MARKER, & LICENSE PLATE LAMPS
GLOVE BOX LAMP & SWITCH
TRANSMISSION TUNNEL LAMP
DOOR SWITCHES
RH
LH
IGNITION KEY WARNING CIRCUIT
KEY ILLUMINATION LAMP
TRUNK LAMP & SWITCH
HEATER FAN SWITCH
HEATER FAN MOTOR
TURN SIGNAL FLASHER
HAZARD SWITCH
TURN SIGNAL SWITCH
TS INDICATOR
HAZARD FLASHER
HAZARD RELAY
LH REAR
LH FRONT
RH FRONT
RH REAR
GAUGE LAMP DIMMER CONTROL
GAUGE ILLUMINATION LAMPS
COLOR CODES
N Brown LG Light Green G Green
U Blue W White B Black
R Red Y Yellow K Pink
P Purple S Slate O Orange
'70 - '71 TR6